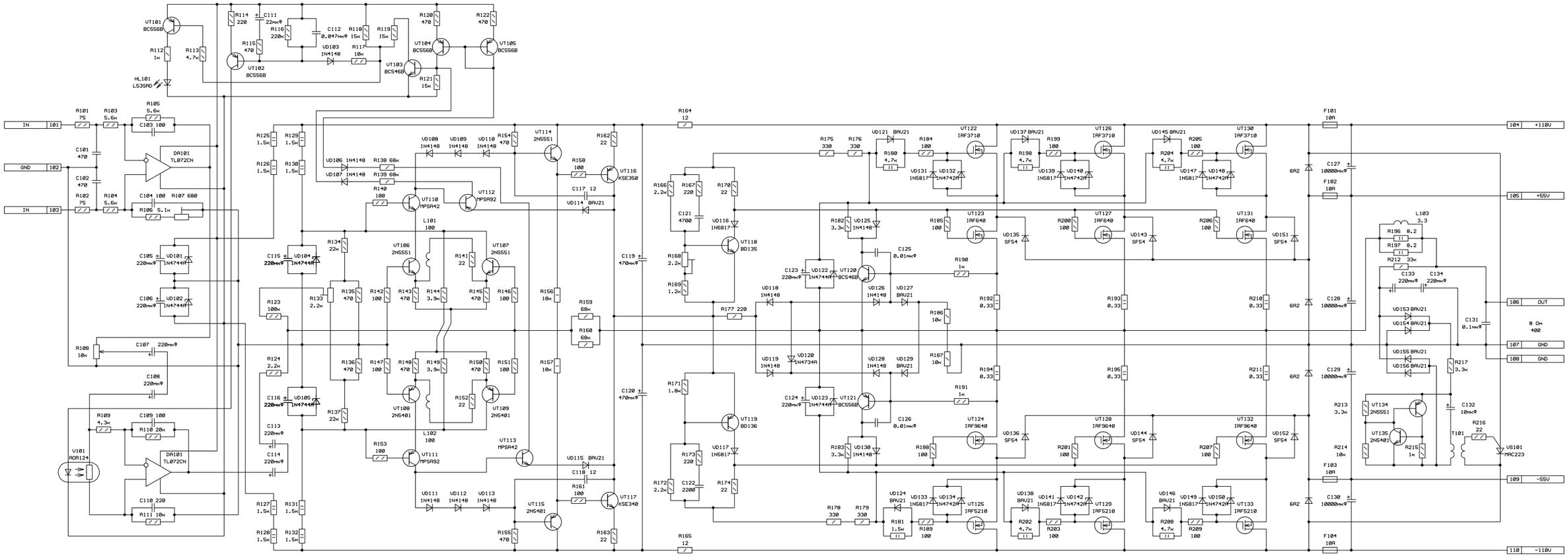
IN 101
GND 102
IN 103
+110V 104
+55V 105
OUT 106
GND 107
GND 108
-55V 109
-110V 110
8 Ом
400
DA101 TL072CN
DA101 TL072CN
VT101 BC556B
VT102 BC556B
VT103 BC546B
VT104 BC556B
VT105 BC556B
HL101 LS3SRD
VT106 2N5551
VT107 2N5551
VT108 2N5401
VT109 2N5401
VT110 MPSA42
VT111 MPSA92
VT112 MPSA92
VT113 MPSA42
VT114 2N5551
VT115 2N5401
VT116 KSE350
VT117 KSE340
VT118 BD136
VT119 BD136
VT120 BC546B
VT121 BC556B
VT122 IRF3710
VT123 IRF640
VT124 IRF9640
VT125 IRF5210
VT126 IRF3710
VT127 IRF640
VT128 IRF9640
VT129 IRF5210
VT130 IRF3710
VT131 IRF640
VT132 IRF9640
VT133 IRF5210
VT134 2N5551
VT135 2N5401
VD101 1N4744A
VD102 1N4744A
VD103 1N4148
VD104 1N4744A
VD105 1N4744A
VD106 1N4148
VD107 1N4148
VD108 1N4148
VD109 1N4148
VD110 1N4148
VD111 1N4148
VD112 1N4148
VD113 1N4148
VD114 BAV21
VD115 BAV21
VD116 1N5817
VD117 1N5817
VD118 1N4148
VD119 1N4148
VD120 1N4734A
VD121 BAV21
VD122 1N4744A
VD123 1N4744A
VD124 BAV21
VD125 1N4148
VD126 1N4148
VD127 BAV21
VD128 1N4148
VD129 BAV21
VD130 1N4148
VD131 1N5817
VD132 1N4742A
VD133 1N5817
VD134 1N4742A
VD135 SF54
VD136 SF54
VD137 BAV21
VD139 1N5817
VD140 1N4742A
VD141 1N5817
VD142 1N4742A
VD143 SF54
VD144 SF54
VD145 BAV21
VD147 1N5817
VD148 1N4742A
VD149 1N5817
VD150 1N4742A
VD151 SF54
VD152 SF54
VD153 BAV21
VD154 BAV21
VD155 BAV21
VD156 BAV21
VD157 BAV21
VD158 BAV21
VD159 BAV21
VD160 BAV21
VD161 BAV21
VD162 BAV21
VD163 BAV21
VD164 BAV21
VD165 BAV21
VD166 BAV21
VD167 BAV21
VD168 BAV21
VD169 BAV21
VD170 BAV21
VD171 BAV21
VD172 BAV21